IEEE 802.4: TOKEN BUS

IEEE 802.4 standard for media access control is known as token bus. Physically, the token bus is a linear or tree-shape cable to which the stations are attached as shown in figure as follows:

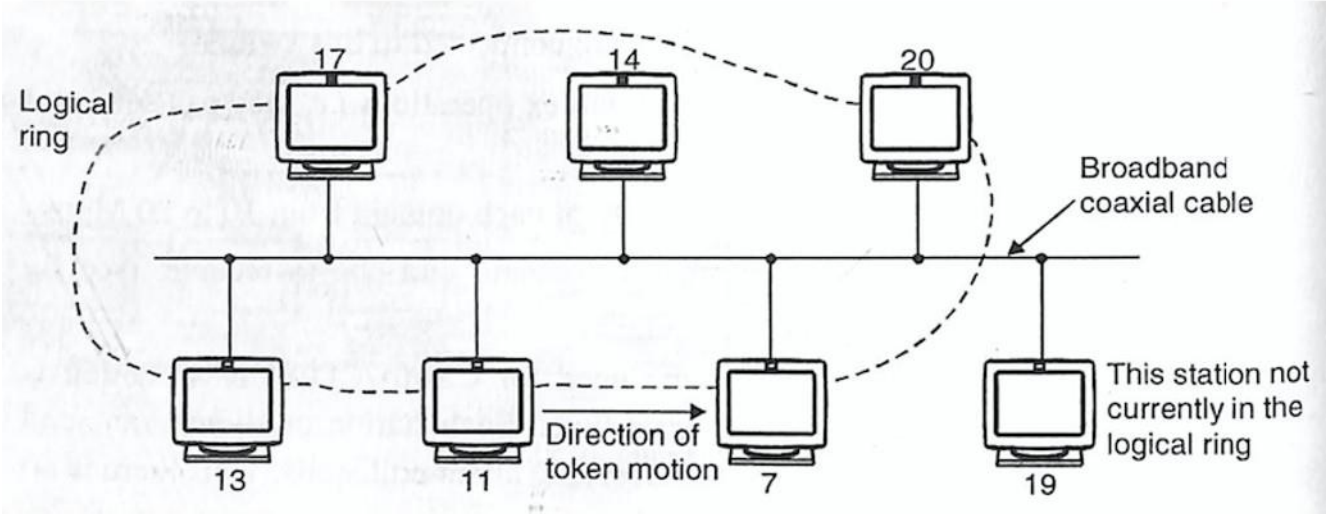

Logically, the stations are organized into a ring. Each station knows the address of the station to its left and right. When the logical ring is initialized, the highest numbered station may send the first frame. After doing so, it passes the permission to its immediate neighbour by sending a special control frame to it. This control frame is called a token. In such a way, a token circulates round logical ring, and only the station holding a token is allowed to transmit data.

In such a case, there is no collision as only one station possesses a token at any given time. In token bus, every station receives each frame; the station whose address is specified in the frame processes it and the other stations discard the frame. When a station passes the token, it

sends a token to its logical neighbour irrespective of where that station is physically located on the cable.

MAC SUBLAYER FUNCTION

When the ring is initialized, stations are inserted into it in order of station address, from highest to lowest. Token passing is done from high to low address. Whenever a station acquires the token, it can transmit frames for a specific amount of time. If a station has no data, it passes the token immediately upon receiving it.

The token bus defines four priority classes, 0, 2, 4, and 6 for traffic, with 0 the lowest and 6 the highest. Each station is internally divided into four substations, one at each priority level i.e. 0,2, 4 and 6. As input comes in to the MAC sublayer from above, the data are checked for priority and routed to one of the four substations. Thus each station maintains its own queue of frames to be transmitted.

When a token comes into the station over the cable, it is passed internally to the priority 6 substation, which can begin transmitting its frames, if it has any. When it is done or when its time expires, the token is passed to the priority 4 substation, which can then transmit frames until its timer expires. After this the token is then passed internally to priority 2 substation. This process continues until either the priority 0 substation has sent all its frames or its time expires. After this the token is passed to the next station in the ring.

FRAME FORMAT OF TOKEN BUS

The various fields present in the frame format are as shown in figure as follows:

1 byte	1 byte	1 byte	2-6 bytes	2–6 byte	0–8182	4 bytes	1 byte
Preamble	Start delimiter	Frame control	Destination Address	Source Address	Data	Checksum	End Delimiter

1. **Preamble:** This field is at least 1 byte long. It is used for bit synchronization.
2. **Start Delimiter:** This one-byte field marks the beginning of frame.
3. **Frame Control:** This one byte field specifies the type of frame. It distinguishes data frame from control frames. For data frames it carries frame's priority. For control frames, it specifies the frame type. The control frame types include token passing and various ring maintenance frames, including the mechanism for letting new station enter the ring, the mechanism for allowing stations to leave the ring.
4. **Destination Address:** It specifies 2 to 6 bytes destination address.
5. **Source Address:** It specifies 2 to 6 bytes source address.
6. **Data:** This field may be up to 8182 bytes long when 2 bytes address are used & up to 8174 bytes long when 6 bytes address is used.
7. **Checksum:** This 4 byte field detects transmission errors.
8. **End Delimiter:** This one byte field marks the end of frame.

The various control frames used in token bus are as follows:

Frame Control field	Name	Meaning
00000000	Claim_token	Claim token during ring initialization
00000001	Solicit_successor_1	Allow station to enter the ring
00000010	Solicit_successor_2	Allow stations to enter the ring
00000011	Who_follows	Recover from lost token.
00000100	Resolve_contention	Used when multiple stations want to enter.
00001000	Token	Pass the token
00001100	Set_successor	Allow station to leave the ring.

LOGICAL RING MAINTENANCE

In token bus, MAC sublayer protocol is responsible for logical ring maintenance. In running network, new stations may join the ring and older stations may leave the ring.

1. ADDITION OF STATION TO LOGICAL RING

Once the ring has been established, each station stores the address of its predecessor and successor stations in the logical ring. In such networks, solicit_successor control frame is used to invite the bids from computers that are wishing to enter into the logical ring.

For this, the station holding the token sends solicit_successor frame periodically, to solicit bid from other stations. The station wishing to join the ring, passes it address to the token holder. The token holder makes it as a new successor.

If two or more stations want to enter into the logical ring, token holder sends resolve_contention control frame to allow exactly one of them to enter the ring.
If no station responds for a particular time slot for entering in the ring, then response window is closed.

2. REMOVAL OF STATION FROM A LOGICAL RING

A station leaves the ring by sending a set_successor control frame to its predecessor telling it that from now onwards its successor is the station next to it and not the current station.

3. RING INITIALIZATION

Ring initialization is the special case of adding new stations. When all the stations are powered off, there exists no logical ring. When the first station is powered-on, it notices no traffic on the network. This station then sends a claim_token control frame to hear from anyone alive in the network. If it does not listens to any competitions it creates a token and a logical ring that consists of itself only. As new stations are powered on, they join the logical ring by using the procedure used to add a station to the logical ring.

4. STATION FAILURE

Logical ring also has a method to deal with failed stations in the network. To avoid sending data to a station that has gone down, each station looks at the station to which it has passed the token. If the token receiver passes the token to its successor or transmits its data, then it is considered

all right. If a station does neither, the token is passed a second time to the same station. If there is no response even after this, the station transmits a who follows control frame with the address of its successor station. When a failed station's successor sees a who_follows frame naming its predecessor, it responds by sending a set_successor frame to the station whose successor failed naming itself as a new successor. In this way, the failed station is removed from the ring.

If the station next to the down station is also down, then the station holding the token sends solicit_successor_2 frame to see anyone alive in the network. Again, new stations bid to enter in the ring like normal routine of the ring.

5. FAILURE OF THE STATION HOLDING THE TOKEN

If the token holder station goes down and takes the token with it, the ring initialization algorithm is run.

Each station has a timer that is reset whenever frame appears on the network. When this timer expires and no token or frame is seen on the network, the Station issues claim_token frame.

IEEE 802.5: TOKEN RING

IEEE 802.5 standard is known as Token Ring. A ring consists of a collection of ring interfaces connected by point-to-point lines i.e. ring interface of one station is connected to the ring interfaces of its left station as well as right station as shown in figure as follows:

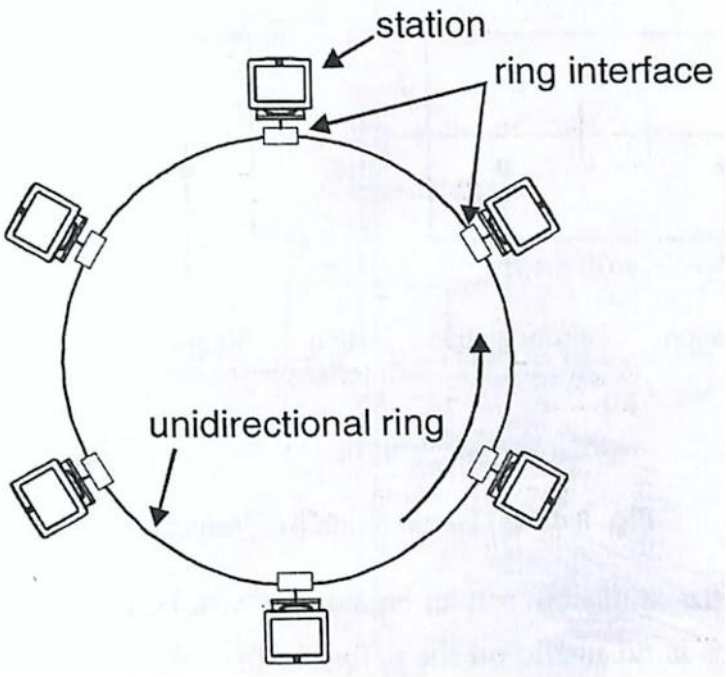

These point-to-point links can be created with twisted pair, coaxial cable or fiber optics. Each bit arriving at an interface is copied into a 1-bit buffer, This copying of bit in the buffer introduces a 1-bit delay at each interface.

In ring networking a token is circulated around the ring. A token is a special bit pattern (3 bytes long). There is only one token in the network. In order to transmit data, a station has to seize the token and remove it from the ring.

The token is seized by changing only one bit in the token. Whenever the station transmits data it adds this token to the first three bytes of beginning of the data frame. Since

network, the token keeps on circulating in the ring unless some station captures it by turning the value of a bit to 1 from 0. A station can hold a token for a specific duration of time. During this time, it has to complete its transmission and regenerates the token in ring.

Under light load, token circulates in ring while under heavy load, queues of data to send are built up on nodes. Whenever a station finishes its transmissions, the other station grabs the token and start its own transmission.

HANDLING CABLE BREAKAGE/ SYSTEM FAILURE IN RING NETWORKS

If the cable breaks, the entire ring network goes down. This can completely stop the propagation of token in the ring. This problem can be solved by using wire centre as shown in figure as follows:

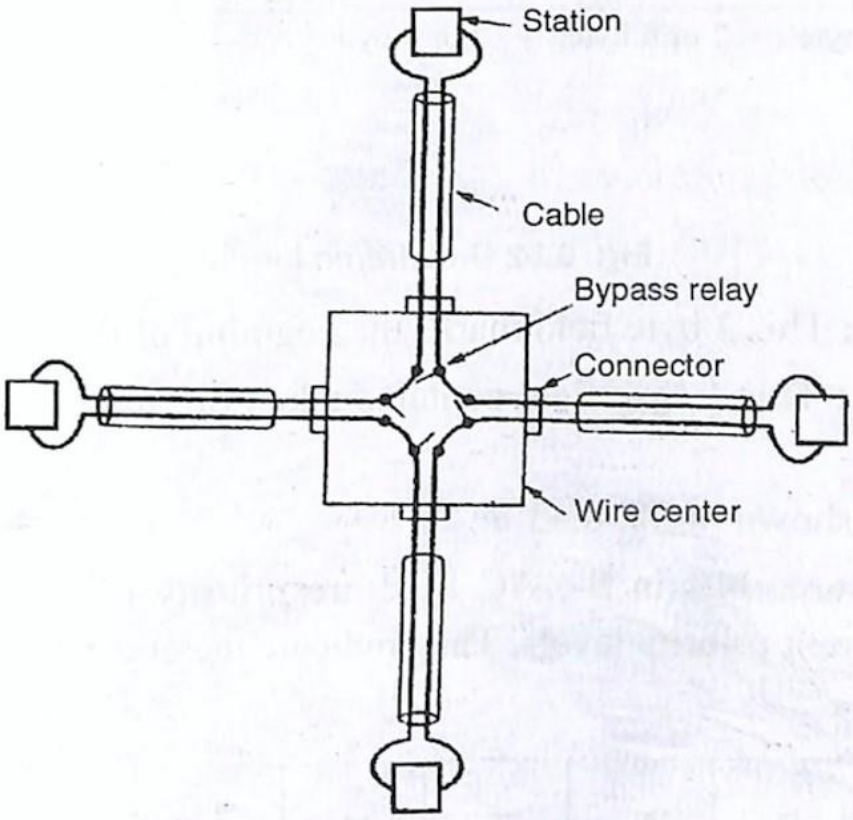

This wire centre bypasses the terminal that has gone down in following manner:

(a) Each station is connected to wire center by a cable containing two twisted pairs, one for data to station and one for data from the station.

(b) Inside the wire center are bypass relays that are energized by the current from the stations.

(c) If the ring breaks or a station goes down loss of drive current will release the relay and bypass the station.

MAC SUBLAYER FUNCTION

When there is no traffic on the ring, a 3-byte token circulates endlessly, waiting for a station to capture it by setting a specific 0 bit to a 1 bit. When any of the station captures this token, that station then adds this 3-bytes token to the beginning of its data.

FRAME FORMAT

The frame format of a token is shown in figure as follows:

SD	AC	ED
1 byte	1 byte	1 byte

SD : Start Delimiter

AC : Access Control

ED : Delimiter

The frame format of a data frame is shown in figure as follows

SD	AC	FC	Destination Address	Source Address	Data	Checksum	ED	FS
1 byte	1 byte	1 byte	2 or 6 bytes	2 or 6 bytes		4 bytes	1 byte	1 byte

FC : Frame Control

FS : Frame Status

1. **Start Delimiter:** This 1-byte field marks the beginning of the frame (data or token).

2. **Access Control:** This 1-byte field contains token bit, monitor bit, reservation bits and priority bits.

This 1-byte field is shown in figure as follows

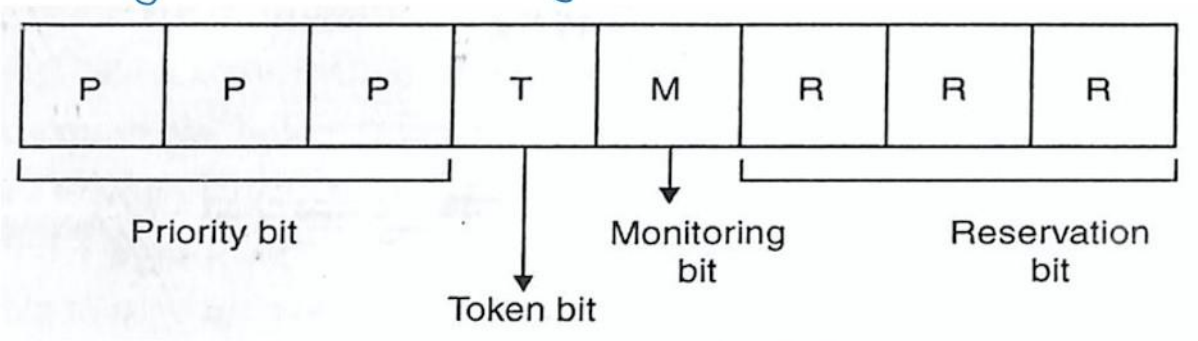

(a) The first three bits in the AC field are priority bits. These bits represents eight different priority levels. They indicate the current level of priority.

(b) The fourth bit in Access control field is Token bit (T) If it is 0 it specifies token frame. If it is 1, it specifies other frame.

(c) Monitoring bit (M) indicates the persistently circulating frames. One of the Stations on the ring acts as an active monitoring station. It identifies and rectifies various error conditions. If the current active monitor fails, any other station can take over its job as monitoring station.

(d) The last three bits of access control field are reservation (R) bits. They are used to reserve the priority level.

3. Frame Control: This is also 1-byte field. It is used to indicate the type of frame, data frame or control frame. It is also used to distinguish between different types of control frames.

4. Destination Address: It is 2 to 6 bytes long and indicates the destination address.

5. Source Address: If is also 2 to 6 bytes long and specifies the source address.

6. Data field: These is no limitation on the size of this field.

IEEE 802.11: WIRELESS LAN

IEEE 802.11 standard provides wireless communication with the use of infrared or radio waves.

802.11 ARCHITECTURE

The 802.11 architecture defines two types of services and three different types of Stations

802.11 SERVICES

The two types of services are

1. Basic services set (BSS)
2. Extended Service Set (ESS)

1. Basic Services Set (BSS): The basic services set contains Stationary or mobile wireless stations and a central base station called access point (AP). The use of access point is optional. If the access point is not present, it is known as stand-alone network. Such a BSS cannot send data to other BSSs. This type of architecture is known as adhoc architecture as shown in figure as follows:

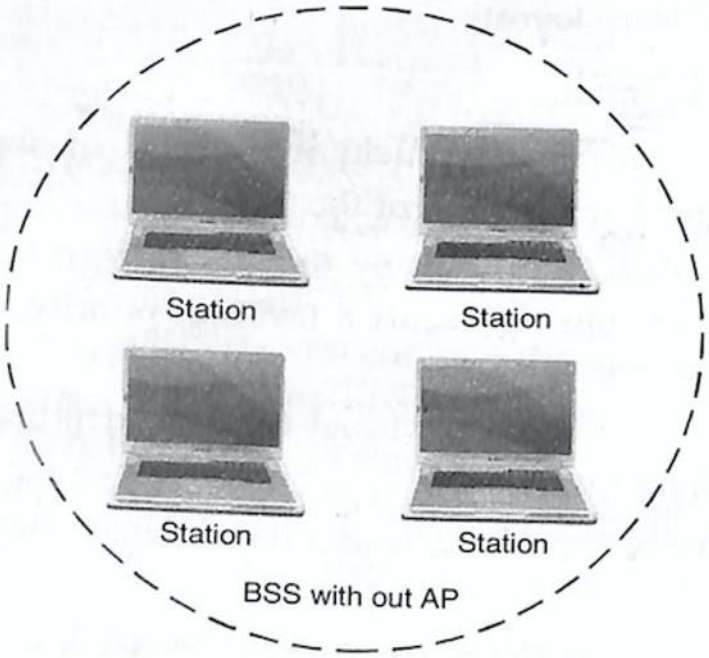

Adhoc network

The BSS in which an access point is present is known as an infrastructure network as shown in figure as follows:

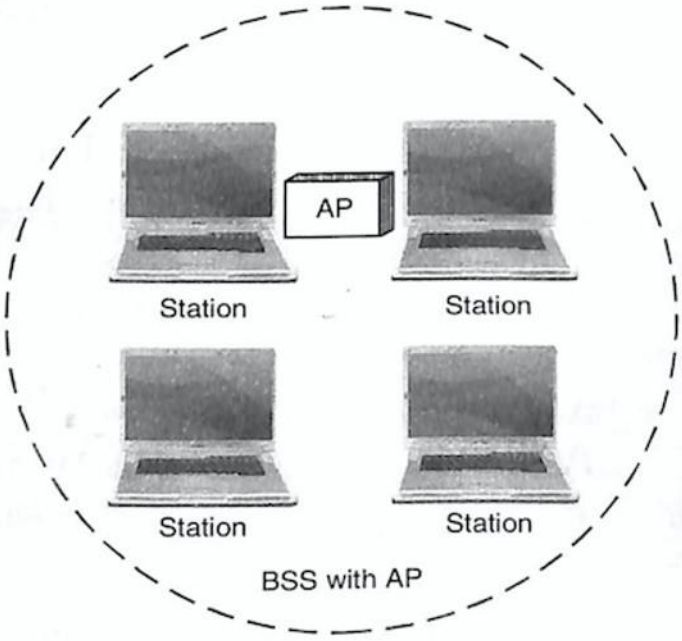

Infrastructure Network

2. Extend Service Set (ESS): An extended service set is created by joining two or more basic service sets (BSS) having access points (APs) as shown in figure as follows:

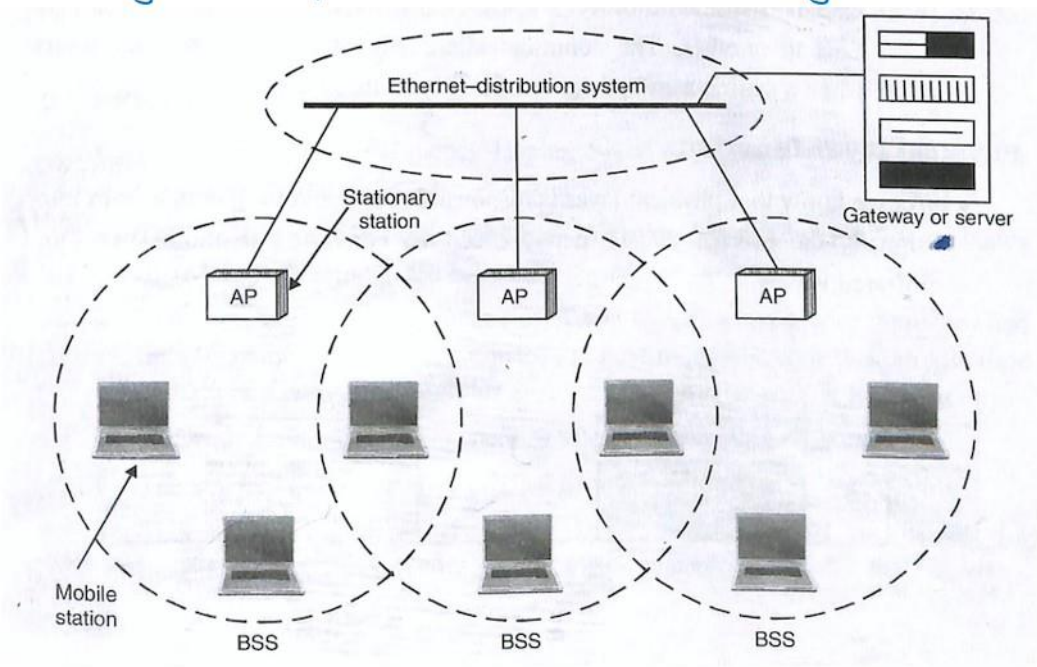

These extended networks are created by joining the access points of basic services sets through a wired LAN known as distribution system.

The distribution system can be any IEET LAN. There are two types of stations in ESS:

(i) **Mobile Stations:** These are normal stations inside a BSS.

(ii) **Stationary Stations:** These are AP stations that are part of a wired LAN.

Communication between two stations in two different BSS usually occurs via two APs. A mobile station can belong to more than one BSS at the same time.

802.11 STATION TYPES

IEEE 802.11 defines three types of stations on the basis of their mobility in wireless LAN. These are:

1. No-transition Mobility
2. BSS-transition Mobility
3. ESS-transition Mobility

1. No-transition Mobility: These types of stations are either stationary i.e. immovable or move only inside a BSS.

2. BSS-transition Mobility: These type of stations can move from one BSS to another but the movement is limited inside an ESS.

3. ESS-transition Mobility: These type of stations can move from one ESS to another. The communication may or may not be continuous when a station moves from one ESS to another ESS.

PHYSICAL LAYER FUNCTIONS

As we know that physical layer is responsible for converting data stream into signals, the bits of 802.11 network can be converted to radio waves infrared waves. These are six

different specifications of IEEE 802.11. These implementations, except the first one, operates in industrial, scientific and medical (ISM) band. These three banks are unlicensed and their ranges are as follows:

1. 902-928 MHz
2. 2.400-4.835 GHz
3. 5.725-5.850 GHz

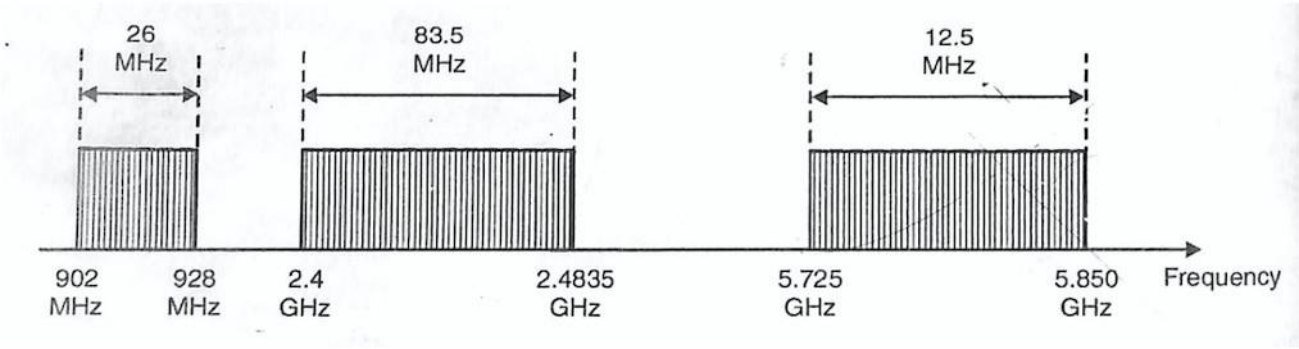

The different implementations of IEE802.11 are given below:

1. IEEE 802.11 INFRARED

It uses diffused infrared light in the range of 800 to 950 nm. It allows two different speeds: 1 Mbps and 2Mbps. For 1-Mbps data rate, 4 bits of data are encoded into 16-bit code. This 16-bit code contains fifteen 0s and a single 1. For a 2-Mbps data rate, a 2-bit code is encoded into 4-bit code. This 4 bit code contains three 0s and a single 1.

The modulation technique used is pulse position modulation (PPM) i.e. for converting digital signal to analog.

2. IEEE 802.11 FHSS

IEEE 802.11 uses Frequency Hoping Spread Spectrum (FHSS) method for signal generation. This method uses 2.4 GHz ISM band. This band is divided into 79 sub bands of 1 MHz with

some guard bands. In this method, at one moment data is sent by using one carrier frequency and then by some other carrier frequency at next moment. After this, an idle time is there in communication. This cycle is repeated after regular intervals.

A pseudo random number generator selects the hopping sequence. The allowed data rates are 1 or 2 Mbps. This method uses frequency shift keying (two level or four level) for modulation i.e. for converting digital signal to analog.

3. IEEE 802.11 DSSS

This method uses Direct Sequence Spread Spectrum (DSSS) method for signal generation. Each bit is transmitted as 11 chips using a Barker sequence.

DSSS uses the 2.4-GHz ISM band. It also allows the data rates of 1 or 2 Mbps. It uses phase shift keying (PSK) technique at 1 M baud for converting digital signal to analog signal.

4. IEEE 802.11a OFDM

This method uses Orthogonal Frequency Division Multiplexing (OFDM) for signal generation. This method is capable of delivering data up to 18 or 54 Mbps.

In OFDM all the sub bands are used by one source at a given time. It uses 5 GHz ISM band. This band is divided into 52 sub bands, with 48 sub bands for data and 4 sub bands for control information,

If phase shift keying (PSK) is used for modulation then data rate is 18 Mbps. If quadrature amplitude modulation (QAM) is used, the data rate can be 54 Mbps.

5. IEEE 802.11b HR-DSSS

It uses High Rate Direct Sequence Spread Spectrum method for signal generation. HR-DSSS is similar to DSSS except for encoding method. Here, 4 or 8 bits are encoded into a special symbol called complementary code key (CCK).

It uses 2.4 GHz ISM band. It supports four data rates: 1,2, 5.5 and 11 Mbps. 1 Mbps and 2 Mbps data rates uses phase shift modulation. The 5.5. Mbps version uses BPSK and transmits at 1.375 Mbaud/s with 4-bit CCK encoding.

The 11 Mbps version uses QPSK and transmits at 1.375 Mbps with 8-bit CCK encoding.

6. IEEE 802.11g OFDM

It uses OFDM modulation technique. It uses 2.4 GHz ISM band. It supports the data rates of 22 or 54 Mbps. It is backward compatible with 802.11b.

MAC SUBLAYER FUNCTIONS

802.11 supports two different modes of operations. These are:

1. Distributed Coordination Function (DCF)
2. Point Coordination Function (PCF)

1. Distributed Coordination Function: The DCF is used in BSS having no access point. DCF uses CSMA/CA protocol for transmission.

The following steps are followed in this method as shown in figure as follows:

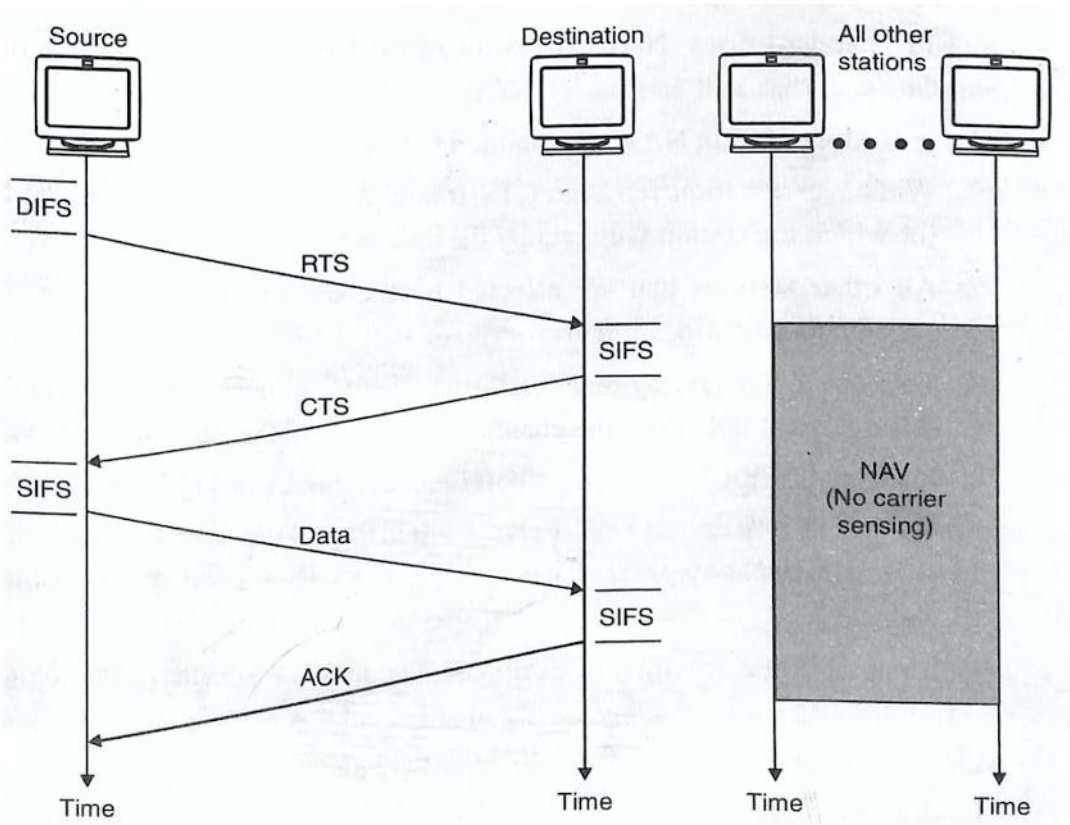

1. When a station wants to transmit, it senses the channel to see whether it is free or not.
2. If the channel is not free the station waits for back off time.
3. If the station finds a channel to be idle, the station waits for a period of time called distributed interframe space (DIFS).
4. The station then sends control frame called request to send (RTS).
5. The destination station receives the frame and waits for a short period of time called short interframe space (SIFS).
6. The destination station then sends a control frame called clear to send (CTS) to the source station. This frame indicates that the destination Station is ready to receive data.

7. The sender then waits for SIFS time and sends data.
8. The destination waits for SIFS time and sends acknowledgement for the received frame.

COLLISION AVOIDANCE

802.11 standard uses Network Allocation Vector (NAV) for collision avoidance. The procedure used in NAV is explained below:

1. Whenever a station sends an RTS frame, it includes the duration of time for which the station will occupy the channel.
2. All other stations that are affected by the transmission creates a timer called network allocation vector (NAV).
3. This NAV (created by other stations) specifies for how much time these stations must not check the channel.
4. Each station before sensing the channel, check its NAV to see if has expired or not. If its NAV has expired, the station can send data, otherwise it has to wait.

There can also be a collision during handshaking i.e. when RTS or CTS control frames are exchanged between the sender and receiver. In this case following procedure is used for collision avoidance:

1. When two or more stations send RTS to a station at same time, their control frames collide.
2. If CTS frame is not received by the sender, it assumes that there has been a collision.
3. In such a case sender, waits for back off time and retransmits RTS.

2. POINT COORDINATION FUNCTION

PCF method is used in infrastructure network. In this Access point is used to control the network activity. It is implemented on top of the DCF and is used for time sensitive transmissions. PCF uses centralized, contention free polling access method.

The AP performs polling for stations that wants to transmit data. The various stations are polled one after the other.

To give priority to PCF over DCF, another interframe space called PIFS is defined. PIFS (PCF IFS) is shorter than DIFS.

If at the same time, a station is using DCF and AP is using PCF, then AP is given priority over the station. Due to this priority of PCF over DCF, stations that only use DCF may not gain access to the channel.

To overcome this problem, a repetition interval is defined that is repeated continuously. This repetition interval starts with a special control frame called beacon frame. When a station hears beacon frame, it starts their NAV for the duration of the period of the repetition interval.

FRAME FORMAT OF 802.11

The MAC layer frame consists of nine fields as shown in figure as follows:

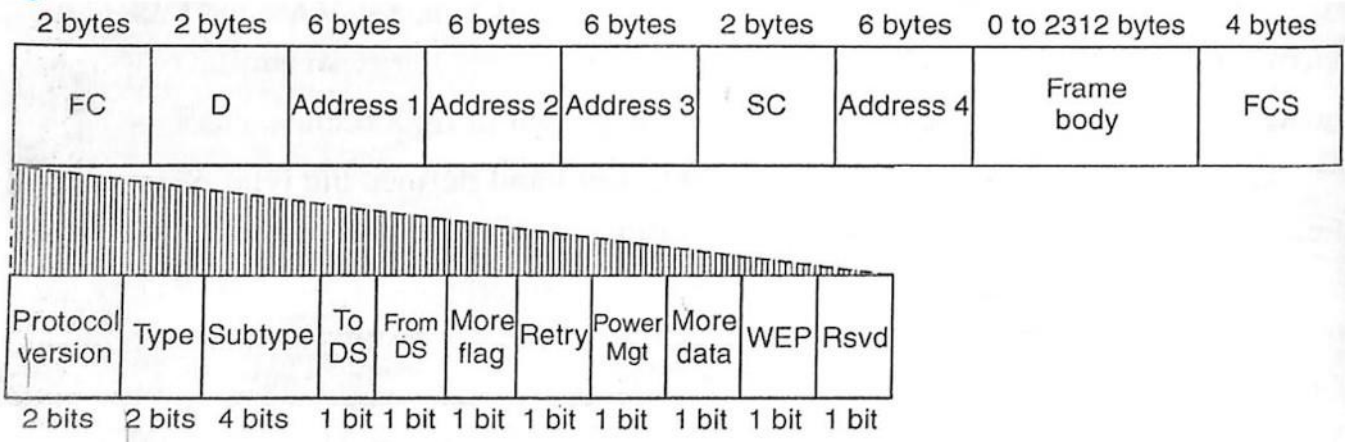

1. Frame control (FC): This is 2-byte field and defines the type of frame and some control information. This field contains several different subfields. These are listed in the table below:

Field	Explanation
Version	The current version is 0.
Type	Specifies the type of information in the frame body 00-management, 01-control, and 10-data.
Subtype	It defines the subtype of each type. For control frame subtype fields are : 1011-RTS, 1100-CTS, 1101-ACK.
TO DS	Indicates frame is going to distributed system.
From DS	Indicates frame is coming from distributed system.
More flag	If the value is 1, means more fragments.
Retry	If the value is 1, means retransmitted frame.
Power Mgt	If the value is 1, means station is in power management mode.
More data	If the value is 1, means station has more data to send.
WEP	WEP stands for wired equivalent privacy ; If set to 1 means encryption is implemented.
Rsvd	Reserved

2. D: It stands for duration and is of 2 bytes. This field defines the duration for which the frame and its acknowledgement will occupy the channel. It is also used to set the value of NAV for other stations.

3. Addresses: There are 4 address fields of 6-bytes length. These four addresses represent source, destination, source base station and destination base station.

4. Sequence control (SC): This 2-byte field defines the sequence number of frame to be used in flow control.

5. Frame body: This field can be between 0 and 2312 bytes. It contains the information.

6. FCS: This field is 4-bytes long and contains CRC-32 error detection sequence.

IEEE 802.11 FRAME TYPES

There are three different types of frames:

1. Management Frame
2. Control Frame
3. Data Frame

1. Management Frame: These are used for initial communication between stations and access points.

2. Control frame: These are used for accessing the channel and acknowledging frames. The control frame are RTS and CTS.

3. Data frame: These are used for carrying data and control information.

802.11 ADDRESSING

There are four different addressing cases depending upon the value of To DS and from DS subfields of FC field. Each flag can be 0 or 1, resulting in 4 different situations.

1. If To DS = 0 and From DS = 0, it indicates that frame is not going to distribution system and is not coming from a distribution system. The frame is going from one station in a BSS to another.

2. If To DS = 0 and From DS = 1, it indicates that the frame is coming from a distribution system. The frame is coming from an AP and is going to a station. The address 3 contains original sender of the frame (in another BSS).

3. If To DS = 1 and From DS = 0, it indicates that the frame is going to a distribution system. The frame is going from a station to an AP. The address 3 field contains the final destination of the frame.

4, If To DS = 1 and From DS = 1, it indicates that frame is going from one AP to another AP in a wireless distributed system. The table below specifies the addresses of all four cases.

TO DS	From DS	Address 1	Address 2	Address 3	Address 4
0	0	Destination	Source	BSS ID	N/A
0	1	Destination	Sending AP	Source	N/A
1	0	Receiving AP	Source	Destination	N/A
1	1	Receiving AP	Sending AP	Destination	Source